This article was downloaded by:
On: *14 January 2011*
Access details: *Access Details: Free Access*
Publisher *Taylor & Francis*
Informa Ltd Registered in England and Wales Registered Number: 1072954 Registered office: Mortimer House, 37-41 Mortimer Street, London W1T 3JH, UK

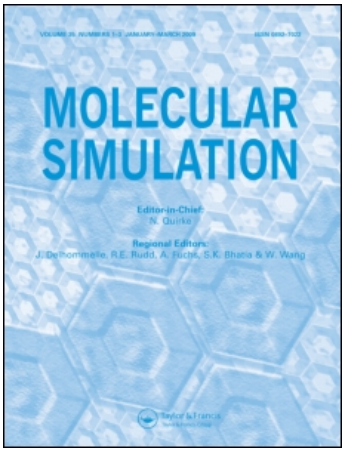

Molecular Simulation
Publication details, including instructions for authors and subscription information:
http://www.informaworld.com/smpp/title~content=t713644482

Dopant Effects in the 1-2-3 Superconductor

M. Saiful Islam[a]
[a] Department of Chemistry, University of Surrey, Guildford, UK

To cite this Article Islam, M. Saiful(1994) 'Dopant Effects in the 1-2-3 Superconductor', Molecular Simulation, 12: 2, 101 — 113
To link to this Article: DOI: 10.1080/08927029408022527
URL: http://dx.doi.org/10.1080/08927029408022527

PLEASE SCROLL DOWN FOR ARTICLE

Full terms and conditions of use: http://www.informaworld.com/terms-and-conditions-of-access.pdf

This article may be used for research, teaching and private study purposes. Any substantial or systematic reproduction, re-distribution, re-selling, loan or sub-licensing, systematic supply or distribution in any form to anyone is expressly forbidden.

The publisher does not give any warranty express or implied or make any representation that the contents will be complete or accurate or up to date. The accuracy of any instructions, formulae and drug doses should be independently verified with primary sources. The publisher shall not be liable for any loss, actions, claims, proceedings, demand or costs or damages whatsoever or howsoever caused arising directly or indirectly in connection with or arising out of the use of this material.

Molecular Simulation, 1994, Vol. 12, pp. 101–113 © 1994 Gordon and Breach Science Publishers S.A.
Reprints available directly from the publisher
Printed in the United States of America
Photocopying permitted by license only

DOPANT EFFECTS IN THE 1-2-3 SUPERCONDUCTOR

M. SAIFUL ISLAM

Department of Chemistry, University of Surrey, Guildford GU2 5XH, UK

(Received March 1993, accepted March 1993)

This paper will review recent atomistic simulations of the dopant properties of the $YBa_2Cu_3O_7$ (1-2-3) superconductor. The simulation techniques are essentially those used previously to study a rich variety of ceramic oxides. Divalent ion substitution for Cu is examined in relation to site-selectivity and changes in local structure. Doping on the Ba sublattice by rare-earth ions (e.g. La^{3+}) and the alternative charge-compensating defects are also considered. Finally, the formation of Fe-O clusters in the Cu(1) basal plane is addressed in some detail.

KEY WORDS: atomistic simulation, superconductor, defect, dopant substitution, cluster

Downloaded At: 19:33 14 January 2011

1 INTRODUCTION

Since the discovery of high temperature superconductivity, a major focus of many studies has been directed towards the effects of metal doping on the $YBa_2Cu_3O_{7-x}$ ("1-2-3") family of compounds [1–24]. A particular concern has been the substitution of the two distinct Cu sites (plane and chain) as a means of gaining insights into the origin of this exciting phenomenon. In all cases of Cu substitution, a deleterious effect on high T_c behaviour is observed, with some metal ions inducing a structural transition. Such a strong influence on doping is not surprising since it is well established that La_2CuO_4 exhibits superconducting properties only when it is doped with Sr or Ba with the creation of compensating defect-holes.

It has become increasingly clear that consideration of local structural features is crucial in order to fully understand the rich variety of dopant-related behaviour. Such features include the site-selectivity for substitution, the type of charge-compensating defects, distortions about the dopant ion and possible cluster formation. However, the experimental analysis of local structure has proved to be extremely difficult (in common with other ceramic oxides [25]), and is partly due to problems of inhomogeneity and the sensitivity of oxygen stoichiometry to processing conditions.

Consequently, these issues have been investigated by computer modelling techniques, which are now an established tool in the study of polar solids; indeed, there is considerable evidence of their ability to model accurately structural and defect properties at the atomic level. A number of studies using these techniques on high T_c superconductors have been reported [26–37]. In this article we concentrate on their role in examining the problems posed by doping in the $YBa_2Cu_3O_7$ system, which includes recent studies of defect clustering.

2 SIMULATION METHODS

The lattice simulations are based on energy minimization procedures and Mott-Littleton methodology embodied in the CASCADE [38] suite of programs. Since more detailed descriptions of the methods and their application to other systems are presented elsewhere, [39] we will give a brief account of the model used.

The simulation methods are based upon the specification of an interatomic potential model which expresses the total energy of the system as a function of the atomic coordinates. For ceramic oxides, the calculations are commonly formulated within a Born model representation, with the total energy partitioned into long-range Coulomb interactions and short-range pair (and three-body) potentials.

In the present investigation the same potential parameters are used as in our previous defect and oxygen transport studies of $YBa_2Cu_3O_7$ [30, 35], in which all the cations are assigned formal integral charges. This has the advantage of allowing a clear distinction between isovalent and aliovalent dopant substitution. With regard to the dopant-host interactions, the potentials were derived from the appropriate binary oxides and have been successfully applied to impurity studies of other ceramic oxides [40].

A vital feature of the defect simulations is the treatment of lattice relaxation around the dopant substitutional or defect cluster. The effect is generally large because the charged defect provides an extensive perturbation of the surrounding lattice. The celebrated Mott-Littleton approach [41] divides the crystal into two regions, so that ions in the central inner region (I) immediately surrounding the defect are explicitly minimized, while the remainder of the crystal is treated as a polarizable dielectric continuum. The explicit simulation of region I uses efficient energy minimization methods which make use of first and second derivatives of the energy function with respect to ion coordinates. In this way the simulations can calculate the energetics of dopant substitution, as well as predict local ion displacements during lattice relaxation. We should add that most substitution experiments are carried out at elevated temperatures where the materials exhibit nonmetallic behaviour. For such systems the simulation techniques have been shown to be reliable.

Downloaded At: 19:33 14 January 2011

3 RESULTS AND DISCUSSION

To demonstrate the role of modelling methods in the study of dopant effects in $YBa_2Cu_3O_7$ we focus on three main topics, which have been extensively investigated in recent years.

3.1 *Divalent ion substitution for Cu*

Numerous studies have been carried out on transition metal substitution for copper that have resulted in single-phase materials but dramatic decreases in T_c. The rich variety of behaviour, as well as much of the conflicting experimental conclusions, arise from the relative energetics of the occupancy of the two inequivalent copper sites (shown in Figure 1). It is generally believed that, of the two sites, the Cu(2) plane is crucial to superconductivity. In evaluating the influence of

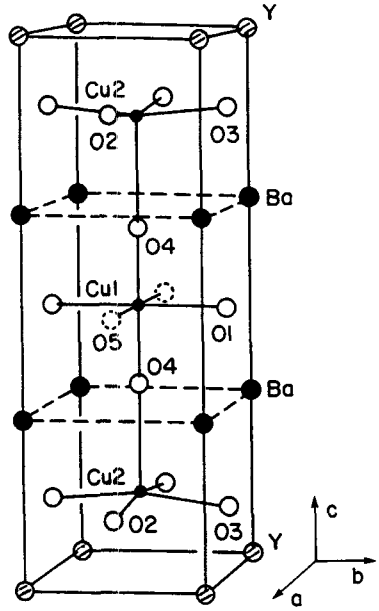

Figure 1 Unit cell of $YBa_2Cu_3O_7$.

substituting ions it is, therefore, apparent that identifying the precise lattice location is important.

The simulation approach is based upon the determination of the relative energetics of dissolution in the oxide. The calculated energies of solution are obtained by combining appropriate lattice (cohesive) energies with energy terms accompanying the formation of the substitutional species (M^x_{Cu}). We first consider the incorporation of divalent dopants (e.g. Ni, Zn) into the Cu^{2+} sublattice, which can be represented by the defect equation:

$$MO + Cu^x_{Cu} \rightarrow M^x_{Cu} + CuO$$

The resulting energies for the two copper sites are plotted as a function of dopant ion radius in figure 2. From this we conclude that the transition metal ions Ni, Zn and Cd preferentially substitute for the Cu(2) plane site, although the energies for Cu(1) are also favourable. Not surprisingly, the alkaline-earth ions (Ca, Sr) are predicted not to substitute for Cu. The solution energies for NiO and ZnO are in agreement with the observation that these oxides dissolve readily in $YBa_2Cu_3O_7$. Moreover, our results accord well with structural studies [2, 5, 6] which find that Ni or Zn ions occupy primarily the Cu(2) sites. Both Ni and Zn would, therefore, be expected to have a depressing effect on T_c by "disrupting" the CuO_2 superconducting planes.

In addition to the calculation of solution energies, the simulation codes generate valuable information on the final atomic positions following lattice relaxation. The local distortion accompanying substitution for the Cu(2) site is illustrated in Figure 3. This indicates significant shifts in the position of the dopant ion and the O(4) bridging oxygen along the c-axis, causing small changes in the local symmetry.

Downloaded At: 19:33 14 January 2011

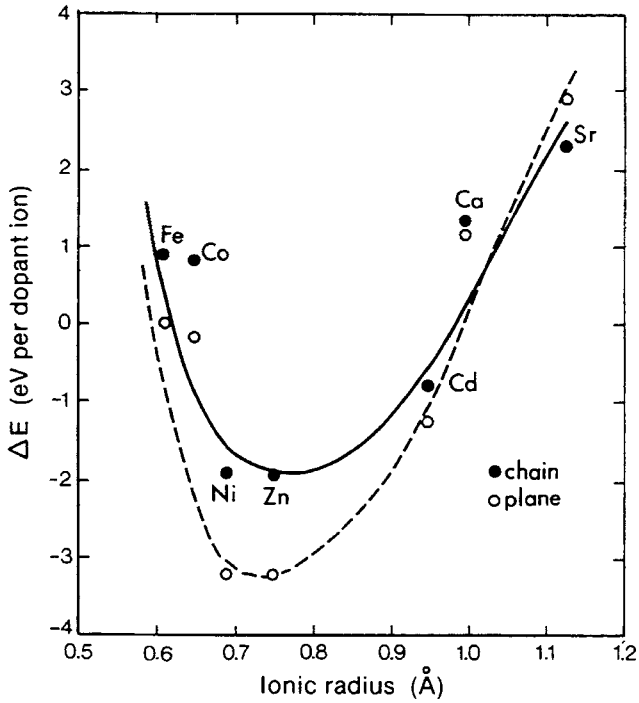

Figure 2 Calculated energies of solution as a function of dopant ion radius for divalent substitution for copper.

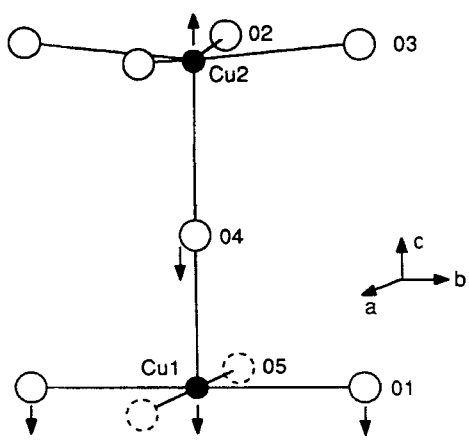

Figure 3 Local displacement of ions for divalent ion substitution at the Cu(2) plane site.

Downloaded At: 19:33 14 January 2011

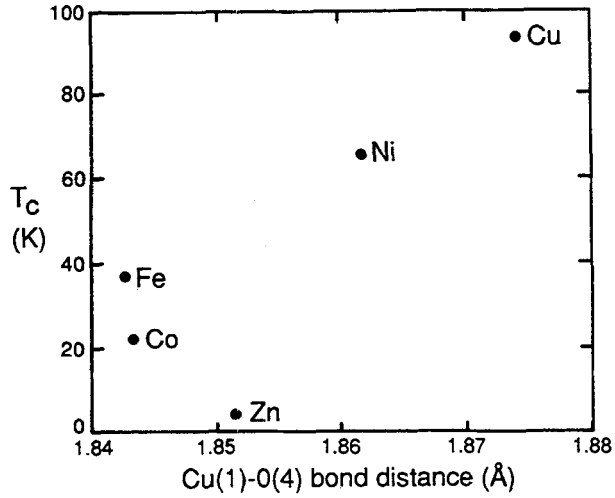

Figure 4 Plot of variation of T_c vs Cu(1)–O(4) bond distance (observed values of T_c from [1]).

Downloaded At: 19:33 14 January 2011

From neutron powder diffraction experiments, correlations of certain average bond lengths with T_c have been discussed [4]. Therefore, to illustrate the behaviour of our computed bond distances we plotted the calculated Cu(1)—O(4) distances versus T_c shown in Figure 4. A trend towards decreasing T_c with decreasing Cu(1)—O(4) bond distance is found. We recognise, however, that the observed value of T_c is strongly dependent on the precise dopant concentration. Nonetheless, diffraction measurements [4] have similarly found T_c decreasing systematically with decreasing Cu(1)—O(4) bond distance, for both the Co-doped and oxygen-deficient materials. It has previously been argued that the superconductivity in the 123 compound is related to charge-transfer effects between the Cu(1) "charge reservoir" layer and the Cu(2) conduction plane [43, 44]. On the microscopic scale the reduction in the Cu(1)—O(4) distance (which is accompanied by a lengthening of the Cu(1)—Cu(2) distance) could be expected to lead to such electronic effects with a correspondingly strong effect on T_c.

3.2 *Rare-earth substitution for Ba*

Rare-earth ions towards the lanthanum end of the lanthanide series are large enough to substitute on the barium site. For example, studies of partial substitution of La^{3+} for Ba^{2+} in $YBa_{2-x}La_xCuO_7$ have observed an orthorhombic to tetragonal transition near $x = 0.4$ [10–12]. Measurements of the oxygen content by thermogravimetry and iodometric titration [11, 12] also indicated that La substitution produces an increase in oxygen content in excess of the O_7 stoichiometry. An important feature of the rare-earth doped compounds is their similar T_c behaviour; this suggests that, as for the Y site, magnetic moments on the Ba site have no significant effect on superconductivity.

The basic problem posed by rare-earth doping on the Ba site concerns the nature of the compensation mechanism for such aliovalent substitution, in particular, whether the charge-compensating mechanism involves extra oxygen (as an

Table 1 Calculated energies of solution (in eV per dopant ion) for trivalent rare-earth substitution for barium.

M_2O_3	$\Delta E(O_i'')^a$	$\Delta E(Cu_{Cu}^{\cdot})^b$
La_2O_3	0.98	3.67
Nd_2O_3	1.11	3.81
Eu_2O_3	1.22	3.91
Gd_2O_3	1.30	3.99
Ho_2O_3	1.45	4.15
Lu_2O_3	1.66	4.36

[a, b] Charge-compensation by oxygen interstitials and reduction in Cu valence, respectively.

O^{2-} interstitial) or a reduction in the formal Cu valence. From our calculations we find an increase in oxygen content to be the most favourable mode (Table 1), represented by the equation:

$$M_2O_3 + Ba_{Ba}^{x} \rightarrow 2M_{Ba}^{\cdot} + O_i'' + 2BaO.$$

This would consequently lead to intercalation of additional oxygen into the Cu(1) layer (at a predicted rate of one O^{2-} per two dopant ions) which accords with experimental findings.

The calculated solution energies are also illustrated as a function of dopant radius in Figure 5; a correlation with ion size is observed with the most favourable energy for La^{3+}. We should note that the relative magnitude of solution energies includes contributions from a variety of terms. However, solid solutions of the systems $R(Ba_{2-x}R_x)Cu_3O_{7+\delta}$ have been investigated and the findings discussed in terms of ion size factors [12]. Our results similarly suggest that dissolution is largely dependent upon ion size, being most favourable for La^{3+} and becoming more difficult with decreasing ionic radius. This behaviour accords with experiment which finds the solubility limits on the barium sublattice decreasing from La to Dy. We should note that the rare-earth ions towards the Lu end of the lanthanide series are comparable in size to Y^{3+} ($r = 0.90$ Å), and a degree of mixing among the yttrium and barium sites might be expected to occur.

3.3 *Fe Clustering*

The extensive studies of $YBa_2(Cu_{1-x}Fe_x)_3O_7$ have revealed that Fe^{3+} substitutes primarily, if not exclusively, at the Cu(1) chain site; such doping results in a decrease in T_c (as with Ni and Zn), but also an increase in oxygen content and an orthorhombic to tetragonal phase transition [2, 5].

For Fe substitution there has been much conflicting interpretation of local structural data, particularly from ^{57}Fe Mössabauer measurements. These difficulties are largely due to the insertion of oxygen into the oxygen-variable Cu(1) layer and hence the various types of coordination possible. Moreover, several investigations have found evidence for the clustering of dopant ions, revealing more complex aspects than earlier work [13–18]. For example, electron-diffraction results of Bordet *et al.* [13] were discussed in terms of linear Fe clusters in the Cu(1) layer having a width of a few cations. A variety of other diffraction and X-ray absorption techniques have been applied to this problem and generally report the formation of Fe clusters

Downloaded At: 19:33 14 January 2011

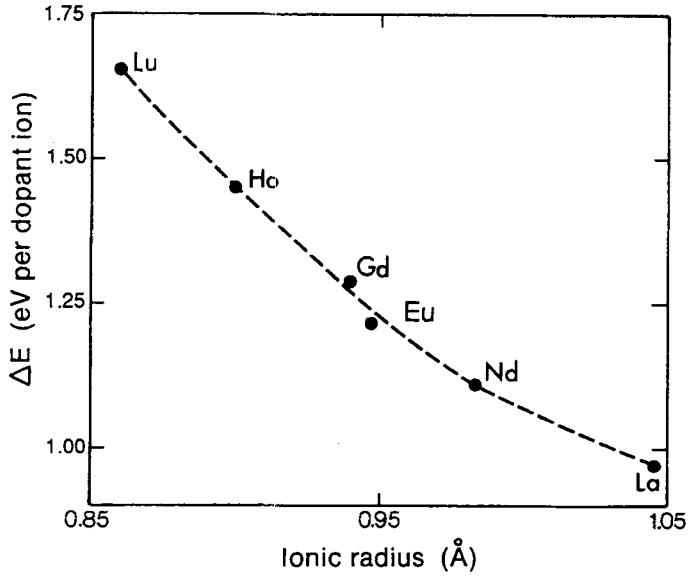

Figure 5 Calculated energies of solution as a function of dopant ion radius for rare-earth substitution for barium.

Downloaded At: 19:33 14 January 2011

with incoming oxygen, such as dimers, tetramers or zig zag type configurations [14–18]. Some of these studies, together with recent ion channelling experiments [19], have shown that Fe is displaced off the Cu(1) position resulting in a distorted coordination. In this context, it is also known that Fe doping leads to the appearance of microdomains and tweed microstructures [20–23].

These results clearly indicate that the changes in superconducting properties are closely related to perturbations in the local structure. However, little quantitative information on the types of cluster configurations and relative binding energies has emerged. Our concern in the present study is to understand how Fe^{3+} dopants on the Cu(1) layer might associate with their charge-compensating defects at the microscopic level. For this task the atomistic simulation methods are well suited as they model accurately the Coulomb and relaxation energies, which are the predominant terms in any localized clustering process.

From our previous studies [36] of trivalent dopant substitution, the following defect reaction involving charge-compensation by oxygen insertion was predicted to be the most favourable:

$$Fe_2O_3 + 2Cu_{Cu} \rightarrow 2\,Fe_{Cu}^{\cdot} + O_I'' + 2CuO$$

This shows that two Fe ions would introduce one additional oxygen ion into the Cu(1) layer, which is in accord with observed estimates of oxygen occupancy [14, 16]. It is well established that interactions between aliovalent impurity ions and their charge-compensating defects can lead to the formation of distinct defect clusters, largely due to Coulombic forces. Consequently, we have identified various two-dimensional cluster configurations comprised of nearest neighbour Fe^{3+} substitutionals and oxygen interstitials on the Cu(1) basal plane.

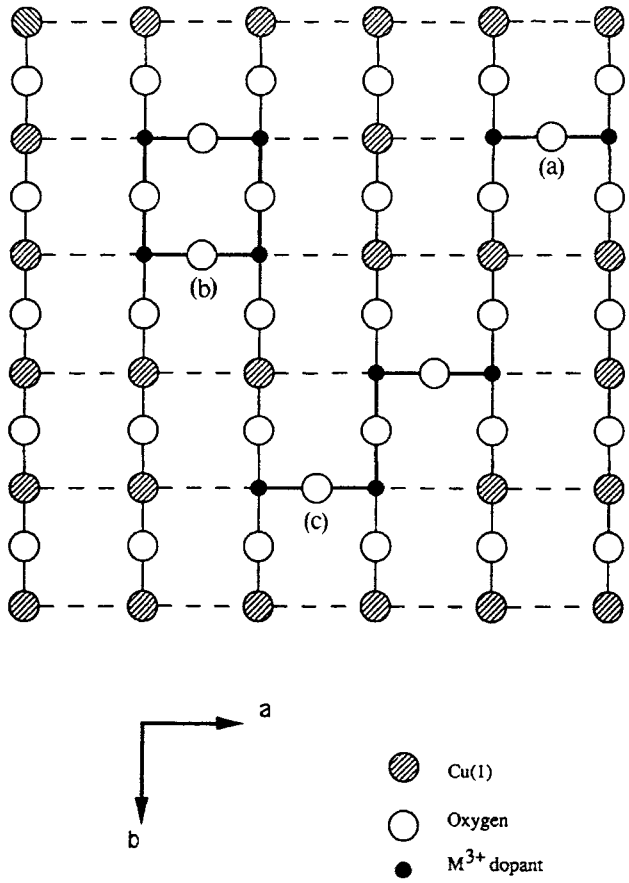

Figure 6 Fe substitutional - oxygen interstitial clusters in the Cu(1) layer (a) dimer (b) square tetramer (c) zig zag tetramer.

The simplest neutral cluster that may form is one containing two neighboring impurity ions and an oxygen ion at the O(5) interstitial position between them. This M—O—M linkage or dimer configuration is shown in Figure 6. For the more complex neutral tetramer, consisting of four impurity ions and two oxygen interstitials, we identified square and zig zag geometries (Figure 6). Finally, we considered two large clusters shown in Figure 7, which we refer to as hexamer and double-chain configurations.

The simulation approach is based on the calculation of cluster-binding energies with respect to the constituent defects. In Table 2 the calculated energetics of the Fe-oxygen interstitial clusters are presented. Examination of the results reveals that the clusters are bound with large binding energies indicating a high degree of stability. This strongly suggests that there will be a greater tendency toward clustering and a less random distribution at higher dopant concentrations, in agreement with experimental evidence.

The relatively high values for the binding energies may indicate that the isolated

Downloaded At: 19:33 14 January 2011

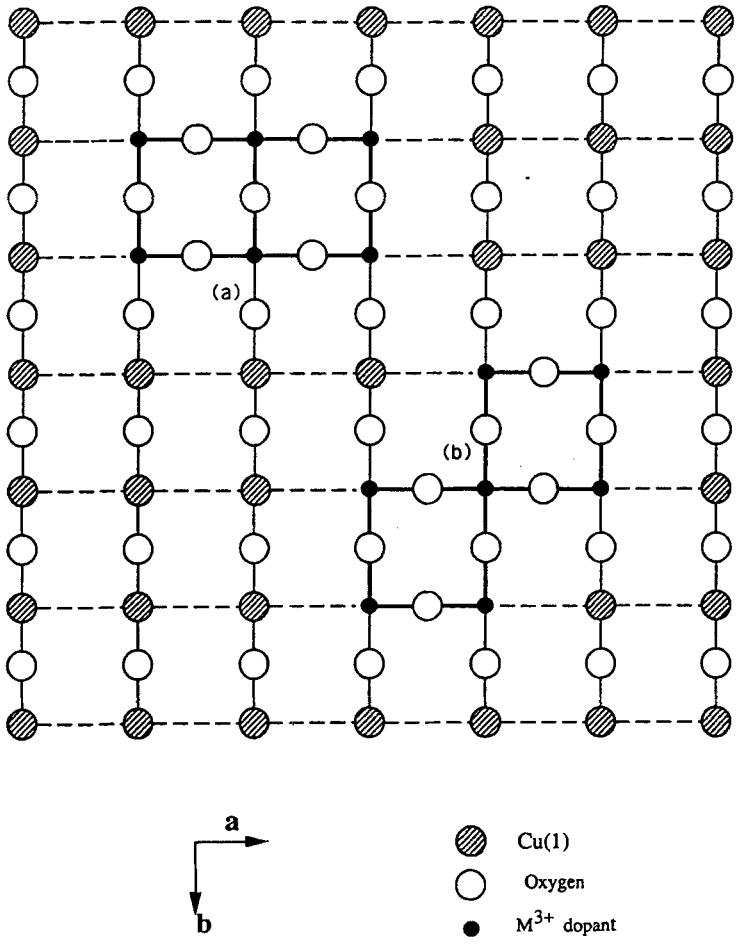

Figure 7 Fe substitutional - oxygen interstitial clusters in the Cu(1) layer (a) hexamer (b) double-chain.

Table 2 Calculated energetics of clusters of Fe^{3+} and oxygen interstitials in the Cu(1) layer.

	Total defect energy (eV)	*Binding energy*[a] *(eV/dopant)*
$(2Fe_{Cu}^{\cdot}O_i'')$ dimer	− 61.77	−2.91
$(4Fe_{Cu}^{\cdot}2O_i'')$ tetramer		
Square	−123.49	−2.90
Zigzag	−120.27	−2.10
$(6Fe_{Cu}^{\cdot}4O_i'')$ hexamer	−206.33	−3.19
$(7Fe_{Cu}^{\cdot}4O_i'')$ double chain	−226.69	−3.03

[a] Negative value indicates system is bound.

Downloaded At: 19:33 14 January 2011

Table 3 Relaxed positions and mean displacements of ions in the double-chain cluster.

Ion	*Normal lattice site*[a]	*Final relaxed position*	*Displacement (Å)*
Fe^{3+}	(0 0 0)	(0.04 0.01 0)	0.15
O(1)	(0 0.51 0)	(−0.10 0.50 0)	0.37
O(4)	(0 0 0.48)	(−0.02 0 0.51)	0.13
O(5)[b]	(0.5 0 0)	(0.5 −0.03 0)	0.13

[a] Atomic coordinates in lattice units (a_0).
[b] Normally unoccupied site in $YBa_2Cu_3O_7$

oxygen interstitial energy is unfavorable in the pure material; this is consistent with the fact that compositions greater than $x = 7$ for undoped $YBa_2Cu_3O_x$ are not easy to attain. In other words, we see that the presence of trivalent impurities encourages interstitial site occupancy and stabilizes oxygen insertion. Of the tetramer geometries examined the high symmetry square configuration is found to be the most energetically favorable, with very similar stability for the dimer. Further enhancement of the binding energy occurs with the edge-shared hexamer which has a slightly larger value than for either the simple dimer or tetramer. Aggregation is, therefore, thermodynamically favored by a process that retains the basic square tetramer unit but increases the total number of dopant ions in the phase.

The alternative "corner sharing" of tetramer units lead to the double-chain configuration shown in Figure 7, which is also calculated to have enhanced stability. This result is consistent with the interpretation of EXAFS data by Bridges *et al.* [15] who support the formation of chains of Fe (or Co) along ⟨110⟩ direction.

Note that clustering does not necessarily preclude the presence of isolated substitutionals, since cluster species will be in equilibrium with single defects as well as other cluster types. The different cluster configurations and sizes could explain the broad hyperfine distributions seen in the Mössbauer spectra of these materials.

We now focus on the local dopant environment: within the clusters the dopant ions tend to have higher coordination then they would if they were isolated. Our results, therefore, suggest that at higher dopant content, the oxygen coordination of Fe will increase with the predominance of five- and six-fold coordination.

Finally, the relaxed positions and mean displacements of selected ions for the double-chain model are summarized in Table 3. These results reveal a substantial movement of lattice ions associated with dopant incorporation. Interestingly, we find large off-centre displacement of the Fe^{3+} ion generally in the ⟨110⟩ direction leading to a noncentrosymmetric coordination. This is in agreement with neutron, EXAFS and ion-channeling experiments which suggest an off-centre model with a distorted Fe environment. The successful prediction of this subtle effect thus provides further confirmation of the validity of the interatomic potentials used.

The general picture that emerges from our results is that Fe and extra oxygen will associate to form clusters with substantial short-range order. These distinct clusters (of 10–20 Å dimensions) are likely to be related to the observed microdomains and tweed structures, which are estimated to be of the order of the superconducting coherence length. Therefore, Fe-O dopant clusters may act as additional flux pinning centres or weak links in the 123 samples.

Downloaded At: 19:33 14 January 2011

4 SUMMARY

We have shown that the application of atomistic simulation techniques can provide a useful systematic treatment of dopant-related phenomena in the $YBa_2Cu_3O_7$ (1-2-3) superconductor. In general, the present study demonstrates the importance of local structural features which are difficult to probe by purely experimental techniques. Our discussion has drawn attention to three main features.

(i) Substitution at the Cu(2) plane position emerges as the most favourable lattice site for divalent 3d cations such as Ni^{2+} and Zn^{2+}. We also calculate a shortening of the Cu(1)—O(4). bond. This may be indicative of "charge-transfer" effects between the Cu(1) and Cu(2) layers, the importance of which has been suggested previously.

(ii) The calculated solution energies suggest that substitution of rare-earth ions is favourable at the Ba site (especially for La^{3+}) with charge-compensation by oxygen insertion.

(iii) A strong tendency for Fe-O clustering (rather than a random distribution) is found with the trivalent dopant stabilizing the insertion of oxygen. The formation of distinct clusters (of 10–20 Å dimensions) and the magnitude of the off-centre displacements may be related to flux pinning centres, as well as promoting the appearance of tweed microstructures.

There remain various dopant properties of superconducting oxides which the present paper has not addressed. The surface segregation of impurities may be investigated with our simulation approach, as may be the mechanisms of dopant ion diffusion. Further studies are underway exploring these topics.

Downloaded At: 19:33 14 January 2011

Acknowledgements

I am very grateful for discussions with R.C. Baetzold, C.R.A. Catlow, C. Ananthamohan and A.M. Stoneham. The work was carried out on the supercomputer facilities at the University of Illionois and the University of London Computer Centre.

References

[1] G. Xiao, F.H. Streitz, A. Garvin, Y.W. Du and C.L. Chien, "Effect of transition-metal elements on the superconductivity of Y-Ba-Cu-O," *Phys. Rev. B* **35**, 8782 (1987).

[2] E. Takayama-Muromachi, Y. Uchida and K. Kato, "Superconductivity of $YBa_2Cu_{3-x}M_xO_y$ (M = Co, Fe, Ni, Zn)," *Jpn. J. Appl. Phys.* **26**, L2087 (1987).

[3] Y. Maeno and T. Fujita, "Effects of Substitution for Copper in High T_c Oxides," *Physica C* **153–155**, 1105 (1988).

[4] P.F. Miceli, J.M. Tarascon, L.H. Greene and P. Barboux, F.J. Rotella and J.D. Jorgensen, "Role of bond lengths in the 90 K superconductor: A neutron powder-diffraction study of $YBa_2Cu_{3-x}Co_xO_7$" *Phys. Rev. B* **37**, 5932 (1988).

[5] T.J. Kistemmacher, "Substitution for copper in $YBa_2Cu_3O_y$: The first 3%," *Phys. Rev. B* **38**, 8862 (1988) and references therein.

[6] R. Liang, T. Nakamura, H. Kawaji, M. Itoh and T. Nakamura, "Superconductivity, magnetism and oxygen nonstoichiometry of $Ba_2Y(Cu_{1-x}M_x)_3O_y$ (M = Zn and Ni)," *Physica C* **170**, 307 (1990).

[7] A. Bartos, H. Plank, D. Forkel, S. Jahn, J. Markel, R Polenka, M. Uhrmacher, S. Winter and W. Witthurn, "PAC- and channeling Experiments in $YBa_2Cu_3O_{7-x}$," *J. Less Common Metals* **164 & 165**, 1121 (1990).

[8] B.D. Padalia, S.J. Gurman, P.K. Mehta and O. Prakash, "Extended x-ray absorption fine-structure studies of 3d ions in $YBa_2(Cu_{1-x}M_x)_3O_7$" *J. Phys. Condens. Matter*, **4**, 6865 (1992) and references therein.

[9] K. Zhang, B. Dabrowski, C.U. Seere, D.G. Hinks, I.K. Schuller, J.D. Jorgensen and M. Slaski, "Solubility and syperconductivity in $RE(Ba_{2-x}RE_x)Cu_3O_{7+\delta}$ systems," *J. Phys. C* **20**, L935 (1987).

[10] R.J. Cava, B. Batlogg, R.M. Fleming, S.A. Sunshine, A. Ramirez, E.A. Rietman, S.M. Zahurak, and R.B. van Dover, "$Ba_{2-x}La_xYCu_3O_{7\pm\delta}$ perovskite compounds: Crystal chemistry," *Phys. Rev B* **37**, 5912 (1988).

[11] A. Manthiram, X.X. Tang and J.B. Goodenough, "Evidence for peroxide formation in superconducting $YBa_{2-x}La_xCu_3O_{7\pm\delta}$," *Phys. Rev. B* **37**, 3734 (1988).

[12] R. Liang, M. Itoh, T. Nakamura and R. Aoki, "The Effect of La Substitution on the Superconductivity of Ba_2YCu_3Oy," *Physica C* **157**, 83 (1989).

[13] P. Bordet, J.L. Hodeau, P. Strobel, M. Marezio and A. Santoro, "Neutron and Electron diffraction study of $YBa_2Cu2_2Cu1_{0.77}Fe_{0.23}O_{7.13}$," *Solid St. Commun.* **66**, 435 (1988).

[14] B.D. Dunlap, J.D. Jorgensen, C. Segre, A.E. Dwight, J.L. Matykiewicz, H. Lee, W. Peng and C.W. Kimball, "Structural Behaviour and Chemical Order of Fe in $YBa_2(Cu_{1-x}Fe_x)_3O_{7+\delta}$" *Physica C* **158**, 397 (1989).

[15] F. Bridges J.B. Joyce, T. Claeson, T.H. Geballe, and J.M. Tarascon, "Distorted chain sites for Co- and Fe-substituted $YBa_2Cu_3O_{7-\delta}$" *Phys. Rev. B* **39**, 11603 (1989).

[16] C.Y. Yang, A.R. Moodenbaugh, Y.L. Wang, Y. Xu, S.M. Heald, D.O. Welch, M. Suenaga, D.A. Fischer and J.E. Penner-Hahn, "X-ray absorption near-edge studies of substitution for Cu in $YBa_2(Cu_{1-x}M_x)_3O_{7-\delta}$ (M = Fe, Co, Ni and Zn)" *Phys. Rev. B* **42**, 2231 (1990).

[17] S. Katsuyama, Y. Ueda and K. Kosuge, "Iron configuration and superconducting properties of $YBa_2(Cu_{1-x}Fe_x)_3O_y$ prepared by various thermal treatments," *Physica C* **165**, 404 (1990).

[18] M.G. Smith, R.D. Taylor and H. Oesterreicher, "Mössbauer study of Fe site occupancy and its effect on T_c in $YBa_2(Cu_{1-x}Fe_x)_3O_{6+y}$ as a function of thermal treatments," *Phys. Rev. B* **42**, 4202 (1990).

[19] L.T. Romano, M.B.H. Bresse, D.N. Jamieson, C. Chen, G.W. Grime and F. Watt, "Atomic position of Fe in $YBa_2(Cu_{1-x}Fe_x)_3O_{7-y}$ using ion channeling," *Phys. Rev. B* **44**, 6927 (1991).

[20] Y.F. Eltsev and A.P. Stretensky, "Magnetic field influence on the resistive superconducting transition shape of $YBa_2(Cu_{1-x}M_x)_3O_{7-y}$ (M= Fe, Al, Zn) ceramics," *Supercond. Sci. Technol.* **5**, 719 (1992).

[21] M. Iliev, Y. Atanassova, L. Bazukou, J. Tihov, V.G. Had Jiev and E. Liarokapis, "Raman and Mössbauer study of the pseudo-orthorhombic-to-tetragonal phase transition in $YBa_2(Cu_{1-x}Fe_x)_3O_{7-\delta}$ $(0.02 \le x \le 0.15)$," Physica C **191**, 419 (1992).

[22] Y. Ren, W.W. Schmahl, E. Brecht and H. Fuess, "Intergrain flux-pinning in relation to structural phase transformation and tweed formation in $YBa_2(Cu_{1-x}Fe_x)_3O_{7-y}$ and $NdBa_2(Cu_{1-x}Fe_x)_3O_{7-y}$" *Physica C* **199**, 414 (1992).

[23] P. Skjerpe, A. Olsen, J. Tafto, M. Suenaga, Y. Zhu and A.R. Moodenbaugh, "Tetragonal $YBa_2(Cu_{1-x}M_x)_3O_{7+\delta}$, M = Fe, Co, Al; tweed constrast and orthorhombic microtwins," *Phil. Mag. B* **65**, 1067 (1992).

[24] R. Dupree, A. Gencten and D. McK. Paul, "A ^{89}Y NMR Study of substitution for copper in $YBa_2(Cu_{1-x}M_x)_3O_7$" *Physica C* **193**, 81 (1992).

[25] A.M. Stoneham and L.W. Smith, "Defect phenomena in superconducting oxides and analogous ceramic oxides," *J. Phys. Condens. Matter* **3**, 225 (1991).

[26] M.S. Islam, M. Leslie, S.M. Tomlinson and C.R.A. Catlow, "Computer Modelling of studies of defects and valance states in La_2CuO_4," *J. Phys. C* **21**, L109 (1988).

[27] C.R.A. Catlow, S.M. Tomlinson, M.S. Islam and M. Leslie, "Hole pairing mechanisms in La_2CuO_4," *J. Phys. C* **21**, L1085 (1988).

[28] N.L. Allan and W.C. Mackrodt, "The calculated defect properties of La_2CuO_4 related to high-T_c superconductivity," *Phil. Mag. A* **58**, 555 (1988).

[29] N.L. Allan and W.C. Mackrodt, "Atomistic Simulation of High-T_c Oxides," *J. Am. Ceram. Soc.* **73**, 3175 (1990).

[30] R.C. Baetzold, "Atomistic simulation of ionic and electronic defects in $YBa_2Cu_3O_7$," *Phys. Rev. B* **38**, 11304 (1988).

[31] R.C. Baetzold, "Electronic Calculations of Large Copper Oxide Clusters", *Inorg. Chem.* **28**, 640 (1989); "Computations of point defect energies in $YBa_2Cu_3O_{6.5}$," *Physica C* **181**, 252 (1991).

Downloaded At: 19:33 14 January 2011

[32] X. Zhang and C.R.A. Catlow, "Computer simulation studies of defects and valence states in $Ba_{1-x}K_xBiO_3$" *Physica C* **173**, 25 (1991).

[33] X. Zhang and C.R.A. Catlow, "Molecular dynamics study of oxygen diffusion in $YBa_2Cu_3O_{6\cdot91}$" *Phys. Rev. B* **46**, 457 (1992).

[34] M.S. Islam and R.C. Baetzold," Dopant Substitution in $YBa_2Cu_3O_7$," *Phys. Rev. B* **40**, 10926 (1989).

[35] M.S. Islam, "Computer Simulation Study of Oxygen migration in $YBa_2Cu_3O_7$," *Supercond. Sci. Technol.* **3**, 531 (1990).

[36] M.S. Islam and C. Ananthamohan, "Defect Clustering in Fe- and Al-substituted $YBa_2Cu_3O_7$," *Phys. Rev. B* **44**, 9492 (1991).

[37] M.S. Islam and C. Ananthamohan, "Lithium Insertion into $YBa_2Cu_3O_7$," *J. Solid St. Chem.* **100**, 371 (1992).

[38] M. Leslie, "Program CASCADE: Description of data sets for use in crystal defect calculations," Tech. Memorandum, SERC Daresbury Lab, UK, 1982.

[39] C.R.A. Catlow and W.C. Mackrodt, Eds of: *Computer Simulation of Solids, Lecture Notes in Physics*, Springer-Verlag, Berlin, 1982.

[40] G.V. Lewis and C.R.A. Catlow," Defect Studies of Doped and Undoped Barium Titanate using Computer Simulation Techniques," *J. Phys. Chem. Solids.* **47**, 89 (1986).

[41] N.F. Mott and M.J. Littleton, "Conduction in polar crystals. I. Electrolytic Conduction in Solid Salts," *Trans. Faraday Soc.* **34**, 485 (1938).

[42] R.J. Cava, B. Batlogg, K.M. Rabe, E.A. Rietman, P.K. Gallagher and L.W. Rupp Jr, "Structural Anomalies at the disappearance of superconductivity in $Ba_2YCu_3O_{7-\delta}$: Evidence for charge transfer from chains to planes," *Physica C* **156**, 523 (1988).

[43] W.K. Kwok, G.W. Crabtree, A. Umezawa, B.W. Veal, J.D. Jorgensen, S.K. Malik, L.J. Nowicki, A.P. Paulikas and L. Nunez, "Electronic behaviour of oxygen-deficient $YBa_2Cu_3O_{7-\delta}$," *Phys. Rev. B* **37**, 106 (1988).

Downloaded At: 19:33 14 January 2011